Sheet 2

Problem1

A lossless transmission line of electrical length $l = 0.35\lambda$ is terminated in a load impedance as shown in Fig. P4. Find Γ_L, SWR, Γ_{in} and Z_{in}.

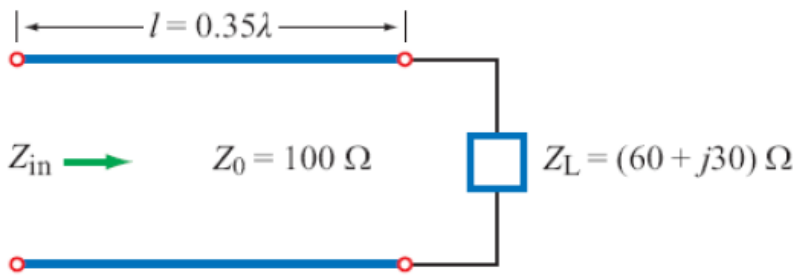

Fig. P4: Circuit for Problem P4.

Problem2

Two half-wave dipole antennas, each with an impedance of 75 Ω, are connected in parallel through a pair of transmission lines, and the combination is connected to a feed transmission line, as shown in Fig. P5.

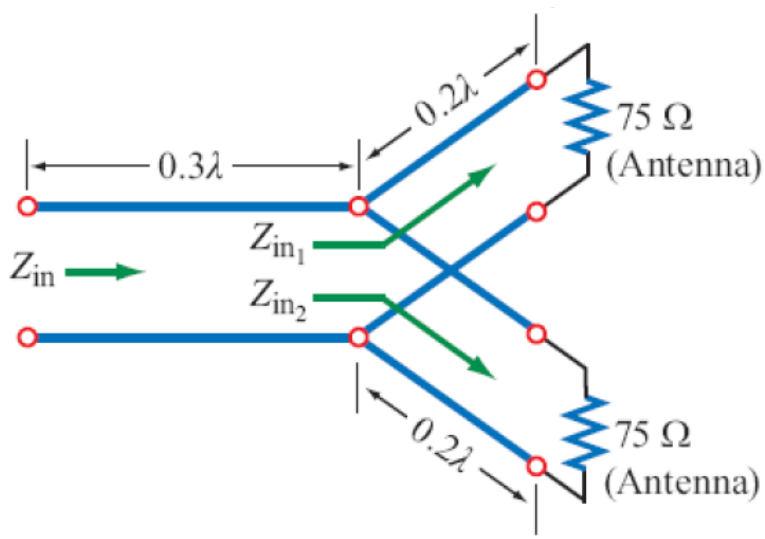

Fig. P5: Circuit for Problem P5.

All lines are 50 Ω and lossless.

(a) Calculate Z_{in1}, the input impedance of the antenna-terminated line, at the parallel juncture.

(b) Combine Z_{in1} and Z_{in2} in parallel to obtain Z_L', the effective load impedance of the feedline.

(c) Calculate Z_{in} of the feedline.

Problem3

2.11 A 100 Ω transmission line has an effective dielectric constant of 1.65. Find the shortest open-circuited length of this line that appears at its input as a capacitor of 5 pF at 2.5 GHz. Repeat for an inductance of 5 nH.

Problem4

2.17 For a purely reactive load impedance of the form $Z_L = jX$, show that the reflection coefficient magnitude $|\Gamma|$ is always unity. Assume that the characteristic impedance Z_0 is real.

Problem5

2.12 A lossless transmission line is terminated with a 100 Ω load. If the SWR on the line is 1.5, find the two possible values for the characteristic impedance of the line.

Problem6

·] The results of a slotted-line experiment are plotted in the following figure. The length of the line is $\ell = 8.4$ cm; its characteristic impedance is $Z_0 = 50\ \Omega$. Find

(a) The reflection coefficient at the load.

(b) The load impedance.

(c) The input impedance.

(d) The reflection coefficient at the generator terminals.

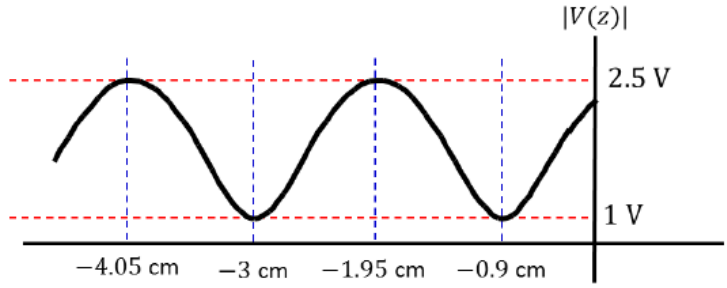

Problem7

2.19 A generator is connected to a transmission line as shown in the accompanying figure. Find the voltage as a function of z along the transmission line. Plot the magnitude of this voltage for $-\ell \le z \le 0$.

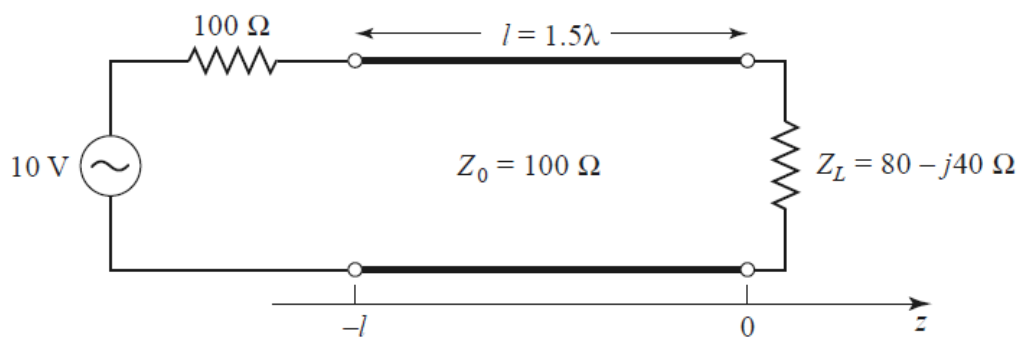

Problem8

2.14 A radio transmitter is connected to an antenna having an impedance $80 + j40\ \Omega$ with a 50 Ω coaxial cable. If the 50 Ω transmitter can deliver 30 W when connected to a 50 Ω load, how much power is delivered to the antenna?

Problem9

2.16 The transmission line circuit in the accompanying figure has $V_g = 15$ V rms, $Z_g = 75\ \Omega$, $Z_0 = 75\ \Omega$, $Z_L = 60 - j40\ \Omega$, and $\ell = 0.7\lambda$. Compute the power delivered to the load using three different techniques:

(a) Find Γ and compute

$$P_L = \left(\frac{V_g}{2}\right)^2 \frac{1}{Z_0}(1 - |\Gamma|^2);$$

(b) find Z_{in} and compute

$$P_L = \left|\frac{V_g}{Z_g + Z_{\text{in}}}\right|^2 \text{Re}\{Z_{\text{in}}\};$$

(c) find V_L and compute

$$P_L = \left|\frac{V_L}{Z_L}\right|^2 \text{Re}\{Z_L\}.$$

Discuss the rationale for each of these methods. Which of these methods can be used if the line is not lossless?

Problem10

2.29 A 50 Ω transmission line is matched to a 10 V source and feeds a load $Z_L = 100\ \Omega$. If the line is 2.3λ long and has an attenuation constant $\alpha = 0.5$ dB/λ, find the powers that are delivered by the source, lost in the line, and delivered to the load.